Junction Boxes

JUNCTION & MECHANISMS BOXES

MECHANISMS
MÉCANISMES

Page. 114

JUNCTION BOXES
BÔITES JONCTION

Page. 116

ACCESSORIES
ACCESSOIRES

Page. 119

AIR CONDITIONING BOXES
BÔITES DE CLIMATISATION

Page. 120

TECHNICAL INFORMATION.

- Complies with Directive 2014/35/EU.
- Complies with Directive 2011/65/EU (RoHS).
- Manufactured under EN 60670-22.
- GWT 650 ºC (GWT 850 ºC for Dry Walls).
- 70 ºC ball pressure test.

INFORMATION TECHNIQUE.

- *Conforme à la Directive 2014/35/EU.*
- *Conforme à la Directive 2011/65/EU (RoHS).*
- *Conforme à la Régle EN 60670-22.*
- *GWT 650 ºC (GWT 850 ºC pour cloison creuse).*
- *70 ºC Essai de pression à la bille.*

Class II
Class II

Halogen Free
Sans Halogène

GWT 650-850 ºC
GWT 650-850 ºC

CE Certification
Certification CE

RoHS Certification
Certification RoHS

MADE IN SPAIN

2 Years guarantee
2 Ans de garantie

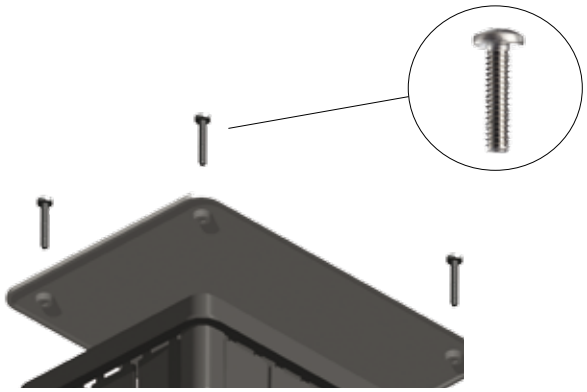

Screw closing system
Système de fermeture à vis

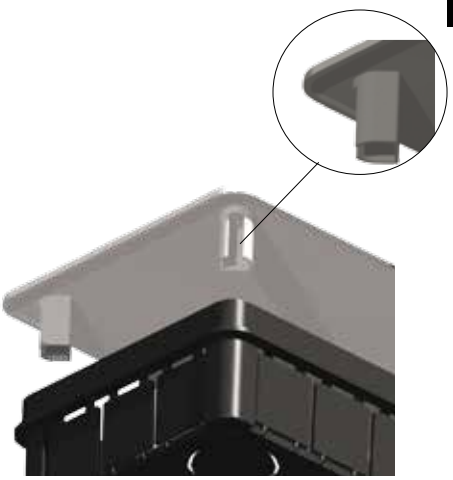

Plastic closing system
Système de fermeture en plastique

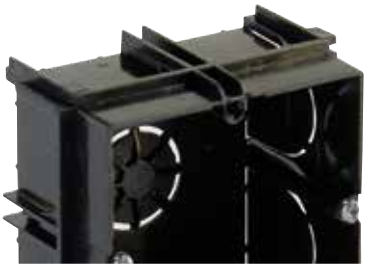

Easy entry break
Facile pause d'entrée

RoHS certification
Certification RoHS

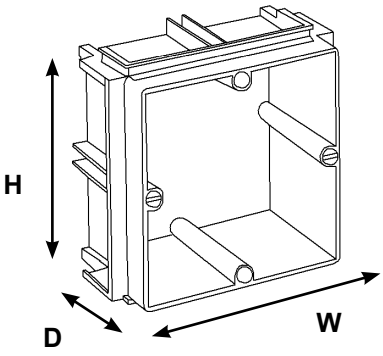

Width x Height x Depth (mm)
Largeur (W) x Hauteur (H) x Profondeur (D) (mm)

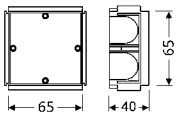

20

500

Ref. 6625

1 mechanism. Linkeable. 9 Entries of Ø25. 65x65x40.
9 Entrées Ø25, 1 mécanisme. Jumelable. *65x65x40.*

POSSIBILITY OF JOINING

***Phillips* screw**

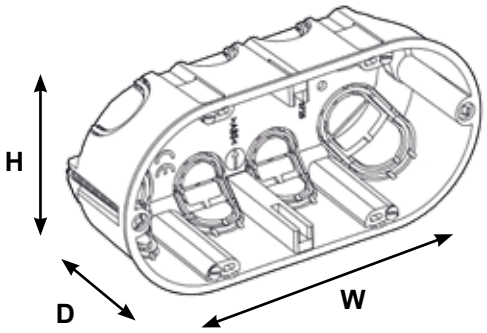

Width x Height x Depth (mm)
Largeur (W) x Hauteur (H) x Profondeur (D) (mm)

10
260

Ref. 5725

2 mechanisms. 4 Entries Ø20mm, 4 entries Ø25. 140x68x46.
2 mécanismes. 4 Entrées Ø20 mm, 4 entrées Ø25. *140x68x46.*

20
500

Ref. 5625

1 mechanism. 4 European entries Ø20. Ø68x46.
1 mécanisme. 4 Entrée européenne Ø20. *Ø68x46.*

6
180

Ref. 5825

3 mechanisms. 6 Entries Ø20mm, 4 entries Ø25. 218x68x42.
3 mécanismes. 6 Entrées Ø20mm, 4 entrées Ø25. *218x68x42.*

650/850°C
RoHS
GUARANTEE 2 YEARS
HF HALOGEN FREE
MADE IN SPAIN

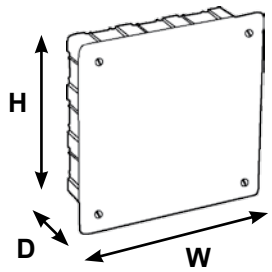

Width x Height x Depth (mm)
Largeur (W) x Hauteur (H) x Profondeur (D) (mm)

10

280

Ref. 361

6 Semicircular entries Ø32. 100x50x45.
6 Demi-aire entrées Ø32.*100x50x45.*

20

560

Ref. 513

7 Entries Ø16. Ø60x40.
7 Entrées Ø16. *Ø60x40.*

4

168

Ref. 362 Ref. 262

12 Entries Ø25. 100x100x45.
12 Entrées Ø25. *100x100x45.*

20

320

Ref. 414

8 Entries Ø25. Ø80x40.
8 Entrées Ø25. *Ø80x40.*

5

90

Ref. 363 Ref. 263

16 Entries Ø25. 160x100x50.
16 Entrées Ø25.*160x100x50.*

20

560

Ref. 575

5 Entries Ø25. Joinable. Ø65x40.
5 Entrées Ø25. Jumelable. *Ø65x40.*

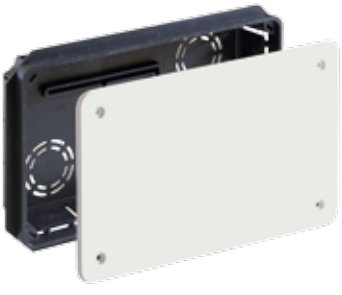

5

100

Ref. 5501

16 Entries Ø32.100x170x40.
16 Entrées Ø32. *100x170x40.*

2

70

Ref. 323 **Ref. 223**

12 Entries Ø32. 150x150x50.
12 Entrées Ø32. *150x150x50.*

2

40

Ref. 5520

18 Entries of Ø40. 1 partion stick. 200x160x70.
18 Entrées Ø40. 1 tige de partition. *200x160x70.*

2

40

Ref. 314 **Ref. 214**

20 Entries Ø32. 200x130x60.
20 Entrées Ø32. *200x130x60.*

1

31

Ref. 5530

14 Entries Ø32, 10 entries Ø40. 2 partion sticks. 300x160x70.
14 Entrées Ø32, 10 entrées Ø40. 2 tiges partition. *300x160x70.*

1

30

Ref. 320 **Ref. 220**

16 Entries Ø40. 200x200x65.
16 Entrées Ø40. *200x200x65.*

1

22

Ref. 5540

30 Entries of Ø40. 3 partion sticks. 400x160x70.
30 Entrées Ø40. 3 tiges de partition. *400x160x70.*

1

62

Ref. 324 **Ref. 224**

20 Entries Ø40. 250x250x60.
20 Entrées Ø40. *250x250x60.*

1

19

Ref. 5550

12 Entries Ø40,18 entries Ø50. 3 partion sticks 500x160x70.
12 Entrées Ø40,18 entrées Ø40. 2 tiges de partition. *500x160x70.*

JUNCTION BOXES HOLLOW WALLS
BOÎTES JONCTION MURS CREUX

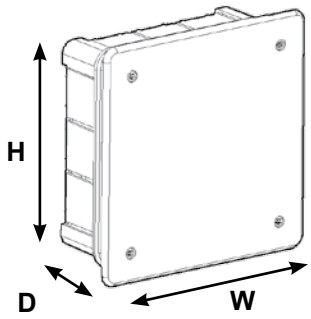

Width x Height x Depth (mm)
Largeur (W) x Hauteur (H) x Profondeur (D) (mm)

4

180

Ref. 5362

10 Entries Ø25. Lid with screws. 100x100x45.
10 Entrées Ø25. Système fermeture à vis.*160x100x45.*

4

120

Ref. 5514

10 Entries Ø25. Lid with central screw. Ø100x46.
10 Entrées Ø25. Fermeture à vis. *Ø100x46.*

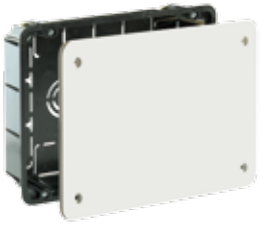

5

110

Ref. 5363

16 Entries Ø25. Lid with screws.164x106x47.
16 Entrées Ø25. Système fermeture à vis.*164x106x47.*

4

72

Ref. 5515

14 Entries Ø25, 4 of Ø32. For hole-saw Ø154. Square lid with central screw and sealing spring flaps. Ø150x46.
14 Entrées en Ø25, 4 en Ø32 et vis centrale Ø154. Système central à vis et fermeture en plastique. *Ø150x46.*

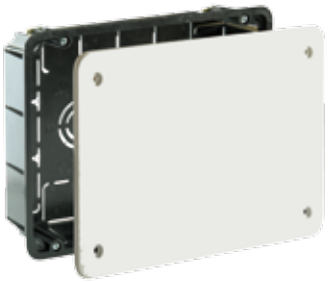

2

56

Ref. 5314

8 Entries Ø25, 2 of Ø32 and 6 of Ø40. Lid fixed with screws. 194x154x50.
16 Entrées Ø25, 2 en Ø32 et 6 en Ø40. Système fermeture à vis.*194x154x50.*

40

72

Ref. 5516

14 Entries Ø25, 4 of Ø32. For hole-saw Ø154. Round lid with central screw and plastic spring clip. Ø150x46.
14 Entrées Ø25, 4 pour Ø32 et vis centrale en Ø154. Système central à vis et fermeture en plastique. *Ø150x46.*

1

4

Ref. 5507H

30 Entries Ø40. White door. 300x500x60.
30 Entrées Ø25. Porte blanche.*300x500x60*

4

180

Ref. 562C

Junction box with metal claw cap. 100x100x45.
Boïtes jonction avec bouchon de griffe en métal. *100x100x45.*

1

60

Ref. 614C

Junction box with metal claw cap. 200x130x60.
Boïtes jonction avec bouchon de griffe en métal. *200x130x60.*

5

110

Ref. 563C

Junction box with metal claw cap. 160x100x50.
Boïtes jonction avec bouchon de griffe en métal. *160x100x50.*

20

500

Ref. 625C

Linkable universal box. 67x77x42.
Boîte universelle Linkable. *67x77x42.*

ACCESSORIES

Refs *Réfs*	Description *Description*	Available for Refs *Disponible pour Réfs*		
Universal Lids *Couvercle Universel*				
25 T	Lids for universal boxes with screw fixures. Ø 104mm *Couvercles pour boîtes universelles avec fixation à vis. Ø 104mm*	Refs. 576, 6625	50	600
25 G	Lids for universal boxes with plastic clips fixure. Ø 104mm *Couvercles pour boîtes universelles avec clips en pastic. Ø 104mm*	Refs. 576, 6625	50	450
Lids *Couvercle*				
5625 TA	Lids for boxes. Plastic screw. White. Ø 82mm *Couvercles de boîtes. Clips à ressort en plastique. Blanc. Ø 82mm*	Ref. 5625	1	500
Lid protection *Couvercle de protection*				
625 TA	Lids for use during construction. 70x70mm. *Couvercles pour assurer une protection lors de la construction. 70x70mm*	Refs. 625 & 6625	1	400
Union *Union*				
5625 Union	Connects box for Ref.5625 *Piece pour conecter des boîtes pour Ref. 5625*	Ref. 5625	50	3800
Partition *Partition*				
5555	Partition peace *Piece de partition*	Refs. 5520, 5530, 5540, 5550.	---	500

1

25

Ref. 665 Included

Ref. 77

30 Entries (includes Ref. 665). Vertical water outlet. 430x147,5x63,5.
30 Entrées (Avec référence 665). Évacuation verticale. 430x147,5x63,5.

1

25

Ref. 665 Included

Ref. 78

30 Entries. Plastic closing system. Horizontal water outlet. (Includes Ref. 665) 430x147,5x63,5.
30 Entrées. Système fermeture en plastique. Évacuation horizontale. (Avec référence 665) 430x147,5x63,5.

1

25

Ref. 177

30 Entries. Plastic closing system. Vertical water outlet. 430x147,5x63,5.
30 Entrées. Système fermeture en plastique. Évacuation verticale. 430x147,5x63,5.

1

25

Ref. 178

30 Entries. Plastic closing system. Horizontal water outlet. 430x147,5x63,5.
30 Entrées. Système fermeture en plastique. Évacuation horizontale. 430x147,5x63,5.

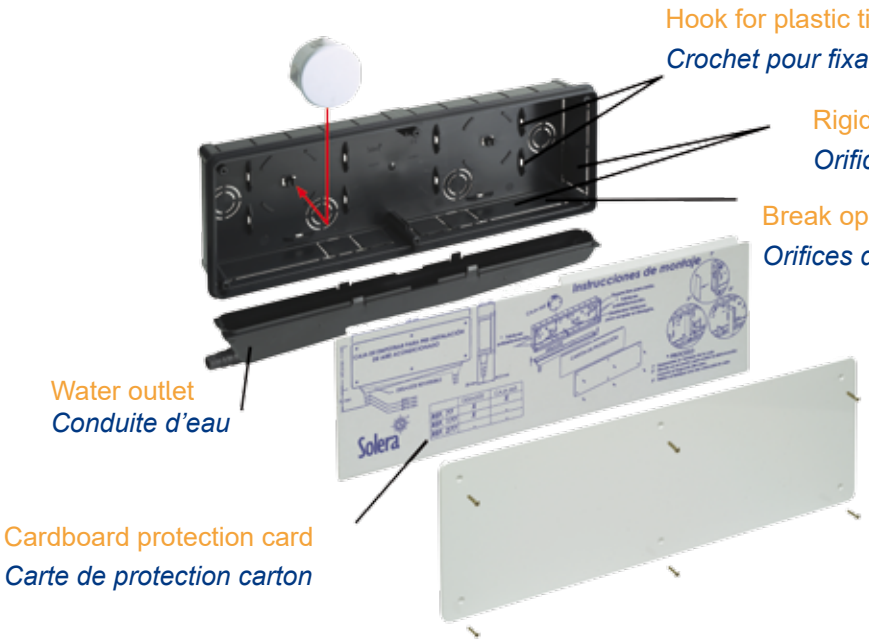

650/850°C RoHS GUARANTEE 2 YEARS HF HALOGEN FREE CE MADE IN SPAIN

JUNCTION BOXES

Ref.	Nº entries	Type of cable channel	LId ref. (for replacement)	Additional info	Exterior measures (mm) a	b	c
Plastic spring clip fixing							
513	7 of Ø 16 mm	Semicircular	13	Plastic spring clip fixing	Ø 60		40
414	8 of Ø 25 mm	Semicircular	414 TA	Lid is screwed directly on to the box	Ø 80		40
262	12 of Ø 25 mm	Rectangular	262 TA	Plastic clip fixing with possibility of screw	100	100	45
263	16 of Ø 25 mm	Rectangular	263 TA	Plastic clip fixing with possibility of screw	160	100	50
223	12 of Ø 32 mm	Rectangular	223 TA	Plastic clip fixing with possibility of screw	150	150	50
214	20 of Ø 32 mm	Rectangular	214 TA	Plastic clip fixing with possibility of screw	200	130	60
220	16 of Ø 40 mm	Rectangular	220 TA	Plastic clip fixing with possibility of screw	200	200	65
224	20 of Ø 40 mm	Rectangular	224 TA	Plastic clip fixing with possibility of screw	250	250	60
277	30 of Ø 32 mm	Rectangular	227 TA	Plastic clip fixing with possibility of screw	430	147	65
Screw fixin							
6635	9 of Ø 25 mm	Semicircular	25 T	-	65	65	40
575	5 of Ø 25 mm				Ø 65	76	40
361	6 of Ø 32 mm	Semicircular	61 T	-	100	50	45
362	12 of Ø 25 mm	Rectangular	62 T	Totally knockable sides	100	100	45
363	16 of Ø 25 mm	Rectangular	63 T	Totally knockable sides	160	100	50
323	12 of Ø 32 mm	Rectangular	23 T	-	150	150	50
314	20 of Ø 32 mm	Rectangular	64 T	Totally knockable sides	200	130	60
320	16 of Ø 40 mm	Rectangular	20 T	-	200	200	65
324	20 of Ø 40 mm	Rectangular	24 T	-	250	250	60
5501	16 of Ø 32 mm	Rectangular	5501 TA	May be use for Telecomunications	100	170	40
5502	20 of Ø 40 mm	Rectangular	5502 TA	May be use for Telecomunications	200	300	60
5503	52 of Ø 40 mm	Rectangular	5503 TA	May be use for Telecomunications	300	500	85
5506	52 of Ø 40 mm	Rectangular	5503 TA	May be use for Telecomunications	300	500	60
5520	18 of Ø 40 mm	Rectangular	5520 TA	European type entry, 1 partition stick (2 compartments)	200	160	70
5530	14 of Ø 32 mm 10 of Ø 40 mm	Rectangular	5530 TA	European type entry, 2 partition sticks (3 compartments)	300	160	70
5540	30 of Ø 40 mm	Rectangular	5540 TA	European type entry, 3 partition stick (4 compartments)	400	160	70
5550	12 of Ø 40 mm 18 of Ø 50 mm	Rectangular	5550 TA	European type entry, 2 partition stick (3 compartments)	500	160	70
77	30 of Ø 32 mm	Rectangular	-	Vertical water outlet. Includes Ref.665	430	147,5	63,5
78	30 of Ø 32 mm	Rectangular	-	Horizontal water outlet. Includes Ref.665	430	147,5	63,5
177	30 of Ø 32 mm	Rectangular	-	Vertical water outlet	430	147,5	63,5
178	30 of Ø 32 mm	Rectangular	-	Horizontal water outlet	430	147,5	63,5

MECHANISM BOXES

Ref.	Nº entries	Nº elements (vertical)	Linkable (vertical)	Additional info	Exterior measures (mm) a	b	c
6625	9 of Ø 25 mm	1	✓	Certified by Aenor with 4 side screw positioning	65	65	40
576	5 of Ø 25 mm	1	✓	Certified by Aenor	75	65	40

DRY WALL MECHANISMS

Ref.	Nº entries	Type of cable channel	Lid ref. (for replacement)	Additional info	Exterior measures (mm) a	b	c
5625	4 of Ø 20 mm	Circular	-	For mechanisms and sockets. Can be linked by using ref. 5625 Union	Ø 68		46
5514	10 of Ø 25 mm	Circular	5514 TA	Round junction box + square lid with central screw + sealing flaps	Ø 100		46
5515	14 of Ø 25 mm 4 of Ø 32 mm	Rectangular	215 TA	Round junction box + lid with plastic spring and central screws	Ø 150		46
5516	14 of Ø 25 mm 4 of Ø 32 mm	Rectangular	216 TA	Round junction box + square lid with central screw + sealing flaps	Ø 150		46
5725	4 of Ø 20 mm 6 of Ø 25 mm	Circular	-	For mechanisms and sockets	136	68	42
5825	4 of Ø 20 mm 6 of Ø 25 mm	Circular	-	For mechanisms and sockets	218	68	42
5362	10 of Ø 25 mm 2 of Ø 32 mm			Junction box + lid with screws	100	100	50
5363	16 of Ø 25 mm	Rectangular	63 T	Junction box + lid with screws	164	106	47
5314	8 of Ø 25 mm 2 of Ø 32 mm 6 of Ø 40 mm	Rectangular	5520 TA	Junction box + lid with screws	194	154	50

CONCRETE WALL MECHANISMS

Ref.	Type of cable channel		Exterior measures (mm) a	b	c
562C	Rectangular		100	100	45
563C	Rectangular		160	100	50
614C	Rectangular		200	130	60
625C	Rectangular		67	77	42